# Fibre-optic lightpipe light fittings in stainless steel for use in hazardous areas Series fibroLUX® E 5035

Stainless steel fibre-optic lightpipe light fitting for use in hazardous areas, type fibroLUX® E 5035 X1 W2, Ex d IIC T4, Ex tD A21 IP65 T130°C, Ex II 2 G + D, 35 W, 230 V, fixation of the light source by fixation legs "X1", fixation of the lightpipe by universal support "W2" onto sightglass to DIN 28120, DN 40, PN 10

Stainless steel fibre-optic lightpipe light fitting, type fibroLUX® E 5035 W W2 sp, Ex d IIC T4, Ex tD A21 IP65 T130°C, Ex II 2 G + D, 35 W, 12 V DC, fixation of the light source by bracket "W", fixation of the lightpipe by universal support "W2" onto sightglass to DIN 28120, DN 40, PN 10

The fibroLUX® stainless steel series of light fittings for use in hazardous areas are technically advanced, innovative top products for the brilliant, powerful and continuous illumination of process equipment, typically in the pharmaceutical and chemical industries. Locating the light source away from the sightglass gives scope for the arrangement "light **and** sight through small sightglasses". With the well known MAX MÜLLER quality, no compromise technology, attention to detail and with proven components from our existing range of light fittings, the fibroLUX® series offers the following advantages:

**For the purchasing department:**

- **Highly competitive price**
- **Short** lead times

**For the design or plant engineer:**

- **The colours of the illuminated products remain "true"**, due to an absolutely white light output
- **Brilliant, targeted illumination**, even under difficult conditions, due to **focusable light output** and movable lightpipe
- The built-in **long life halogen bulb is industry standard**, available from local suppliers throughout the world
- **Easiest mounting** due to different mounting possibilities and an absence of orientation prescriptions
- The components of the system **do not require expensive servicing** due to long maintenance intervals
- There are **no complicated pre-installation checks to be carried out with respect to the conformance of the unit to its certification**: The unit is delivered ready for use
- The system is **designed for continuous operation**, thus allowing uninterrupted observation of the process reaction steps
- **Maximum length of the lightpipe: 5 m**
- Certified to ATEX in the groups G (zones 1 and 2) and D (zones 21 and 22)

**For the electrician:**

- The light fitting may be supplied for use with a **wide range of supply voltages** (see overleaf)
- M20 x 1,5 standard tapping for gland permits easy change to a site standard or use with SWA cable
- **Quick bulb replacement**

**Application:**

For use in hazardous areas, mainly in situations where there is insufficient room to fit a "classic" type of sightglass light fitting, where there is only one very small sightglass available for both illumination and observation or in situations where it is desirable to highlight a specific area of a reaction or of the reaction vessel (e.g. for maintenance purposes). Especially recommended for use in sterile environments.

**Conditions of service:**

The mounting is **independent** of the internal pressure or vacuum of the equipment to be fitted with. **There are no restrictions for the mounting position.**

**Technical data:**

| | |
|---|---|
| Mode of service: | Continuous service. For timed operation, see overleaf. |
| Enclosure protection degree: | IP 65, dust and water jet tight to EN 60529 / DIN VDE 0470 part 1 |
| Ignition protection type: | Ex d to EN 60079-0 / 60079-1<br>Ex tD A21 IP65 to EN 61241-0 / 61241-1 |
| Explosion group: | IIC |
| Temperature class G / D: | T4 / T130°C (T3 / T195°C in 24 V AC / DC)<br>$T_a$ = - 20°C / + 40°C ($T_a$ up to + 60°C on request) |
| ATEX: | Ex II 2 G + D |

**MAX MÜLLER AG**

**Europe's largest sightglass light fitting programme!**
**Perfect, thoroughly engineered solutions from one hand!**
**Always an interesting, technically advanced idea ahead!**

# Dimensions
# Electrical data
# Construction and materials
# Additional equipment

Light source

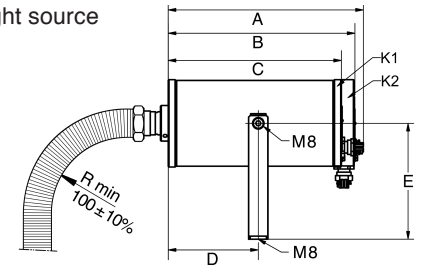


| A | B | C | D | E |
|---|---|---|---|---|
| 254 | 243 | 225 | 117 | 150 |

Light source

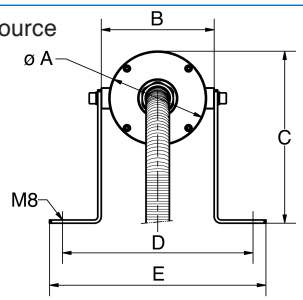


| A | B | C | D | E |
|---|---|---|---|---|
| 113 | 133 | 207 | 223 | 253 |

Lightpipe: Version “flood” or “spot”

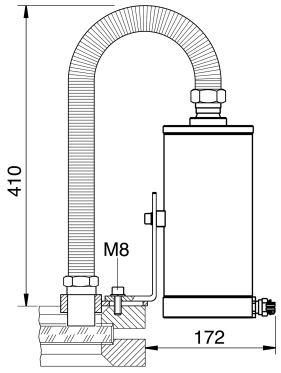


Fixation of the light source by bracket “W” on sightglasses to or similar to DIN 28120 / 28121

Lightpipe:
Version “flood”, “W2” Version “spot”, ”W3”

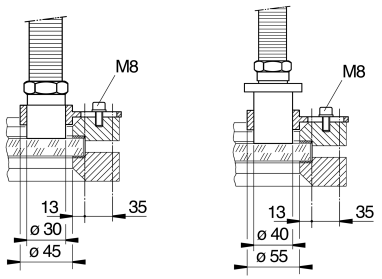


Fixation “W2” / “W3” on sightglasses to or similar to DIN 28120 / 28121

All dimensions in mm. Subject to changes without preliminary notice.

**Electrical data:**

Supply: Alternating current (AC) or direct current (DC), depending on light source

Supply voltages: With integrated transformer: 24 / 36 / 42 / 115 / 230 / 240 V AC (T4)
Without integrated transformer: 12 V AC / DC (T4); 24 V AC / DC in T3 (type E 5050)

Power: 35 W

Bulb socket: GU 5.3

Bulb: Halogen, 35 W / 12 V
Industry standard bulb with an effective operating life of ca. 2500 hours

**Construction and materials:**

Compact light source housing and its fixation elements of stainless steel. Marked earth terminal on the outside of the housing. Cable gland M20 x 1,5, vertical (“K1”, standard) or horizontal (“K2”). Separation transformer to VDE 0171, if built-in. Built-in fine fuse, appropriate to the respective supply voltage (for versions with trafo). The light from the halogen bulb is optimally focused on to the lightpipe by an efficient reflector system. Light source mounting either via the “X1” fixation legs or bracket “W” (see dimensioned drawings) or by the customer making an adaptation. Lightpipe designed for optimum light transmission, directly fixed to the light source housing. Lengths of the lightpipe are 0,5 m / 0,75 m / 1 m / 2 m / 3 m / 4 m / 5 m, other lengths on request. Light output as a wide beam, “flood” (standard delivery) or with narrow beam “spot” (see options). Light transmitting fibres protected by a galvanized steel flexible tube, enclosed in a chemical and temperature resistant silicon rubber tube. Lightpipe terminated with a stainless steel ferrule, ground flat and polished for close fit to the sightglass. Minimum bending radius of the lightpipe assembly 100 mm / ± 10%. Fixation of the lightpipe to the sightglass concerned with a stainless steel universal support “W2” or “W3” (for the spotlight adapter), with an M8 screw.

**Additional equipment:**

Timers:
- External timer type U3 with polyester resin housing, to be branched into the supply of the light source.
- External timer type RU3 with stainless steel housing, to be branched into the supply of the light source.
(see respective data sheet)

Spotlight adapter “SA”: To produce a narrow focused output beam. Lens holder in stainless steel to be positively positioned on the emitting end of the lightpipe, adjusted in our works. May be removed / refitted, thus allowing either “flood” or alternatively “spot” operation.

Do you wish for more information about our wide range of light fittings for use in hazardous and safe areas, about our range of circular sightglasses to DIN 28120/28121, screwed sightglasses similar to DIN 11851, rectangular or D-ended sightglasses, pipeline flow indicators, centrally or sideways operated wipers, hinged sightglasses, spraying devices, camera systems for hazardous areas or our complete sight and lightglass units VETROLUX®? Are you interested in other types, special versions or different protection degrees? If yes, please contact us, our branch office or our local agents – it is our business! You will find the necessary indications about our sales network on the Internet.


MAX MÜLLER AG
PROCESS ILLUMINATION AND VISUAL OBSERVATION SYSTEMS
Hagmattstrasse 19 • CH - 4123 Allschwil / Switzerland
Telephone +41 61 487 92 92 • Telefax +41 61 487 92 99
www.maxmuellerag.com E-Mail: blt@maxmuellerag.com


01.11